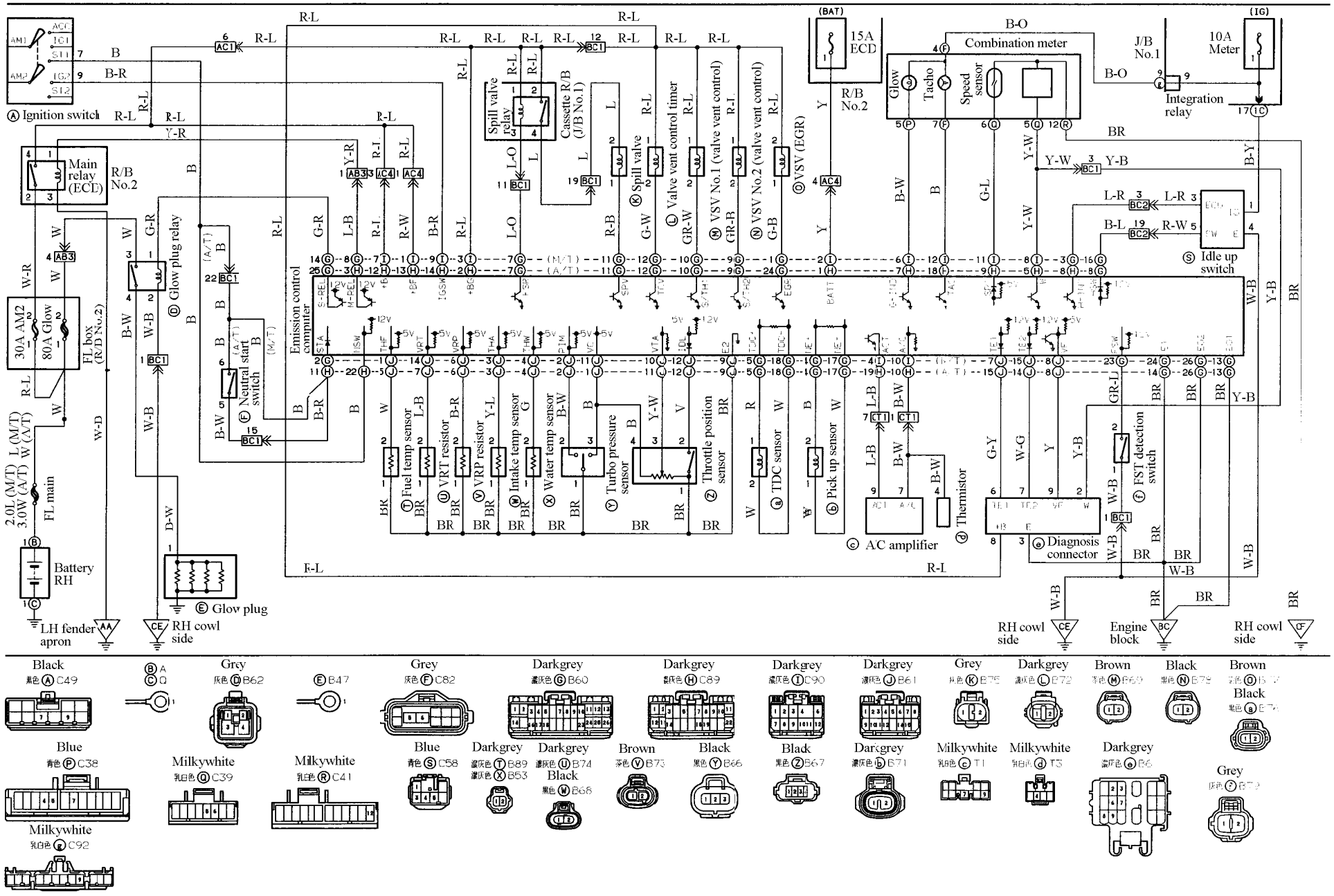Emission control (1KZ-TE)